72 KW 480 VOLT 110 CONTROL CIRCUIT RECIRCULATION

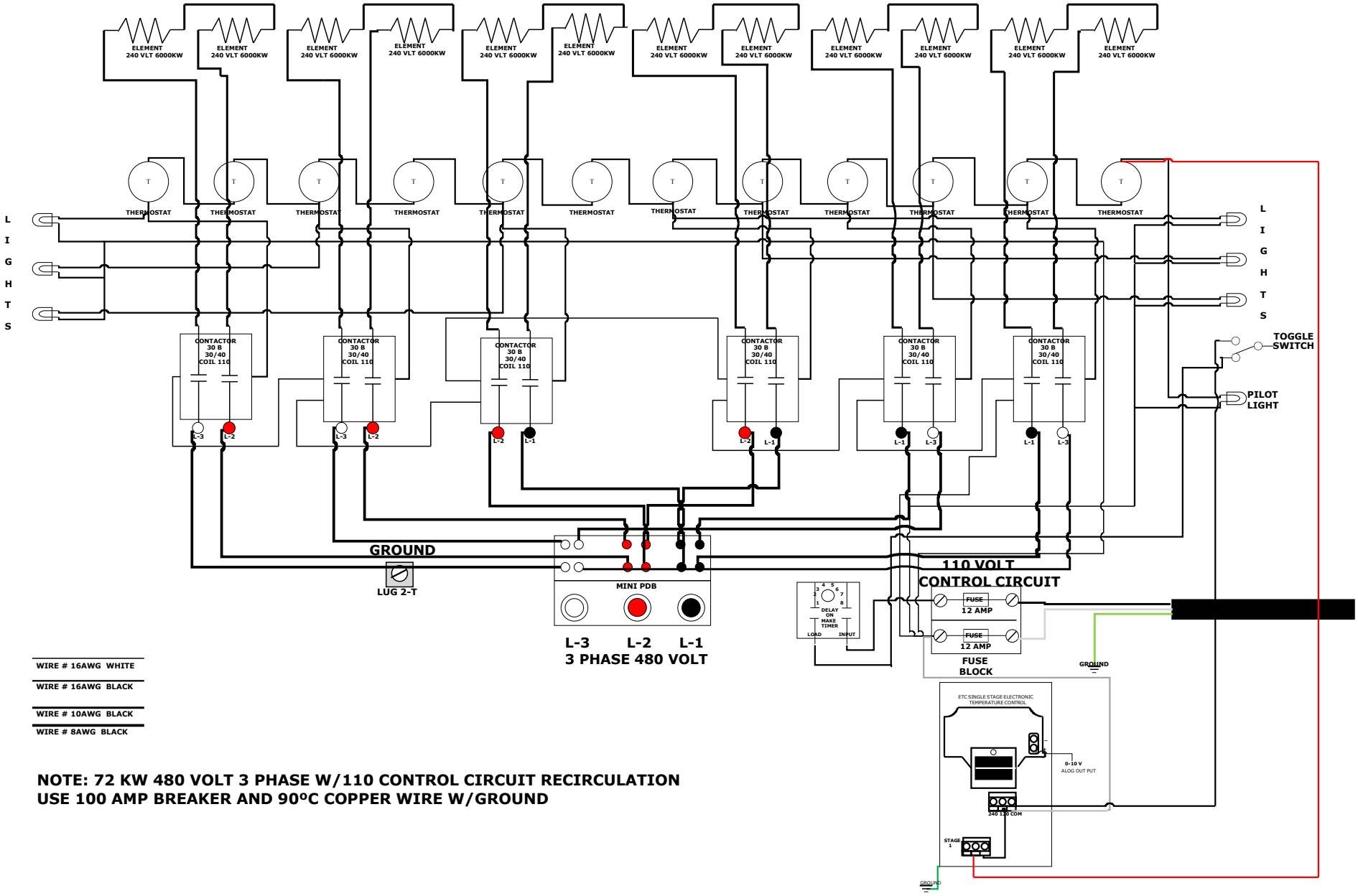

WIRE # 16AWG WHITE

WIRE # 16AWG BLACK

WIRE # 10AWG BLACK

WIRE # 8AWG BLACK

NOTE: 72 KW 480 VOLT 3 PHASE W/110 CONTROL CIRCUIT RECIRCULATION
USE 100 AMP BREAKER AND 90ºC COPPER WIRE W/GROUND